REV	DESCRIPTION OF REVISION	ECN NO.	BY	DATE	APPROVED
A	Initial Release	———	T.Haiyun	26/02/09	26/02/09

This document contains proprietary information and such informationmay not be disclosed to others for any purposes, not used for sales/marketing/procurement purposes without written permission

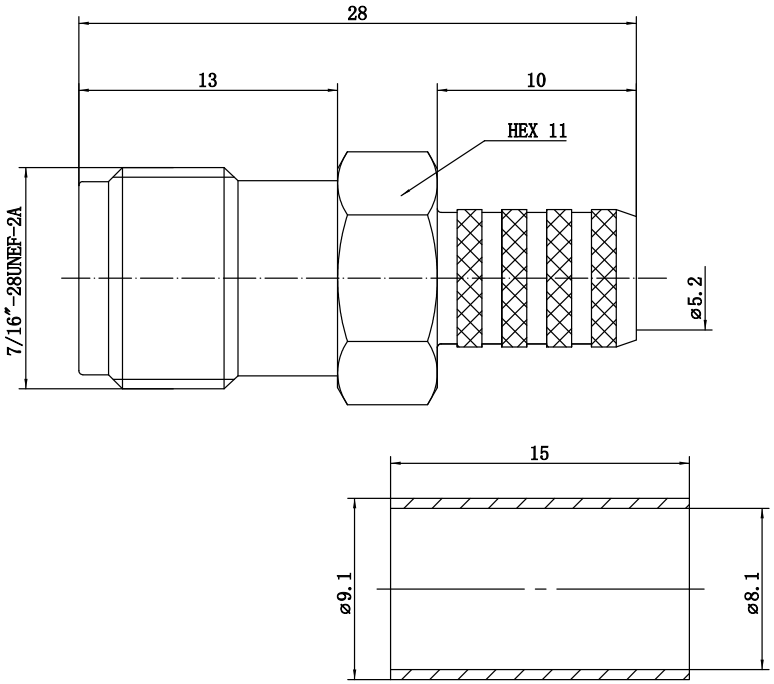

1 Electrical

1.1 Impedence	50Ω
1.2 Frequency	DC～6GHz
1.3 Dielectric withstanding voltage	1500V(volts RMS)
1.4 Center contact resistance	≤ 1.5MΩ
1.5 Outer contact resistance	≤ 0.2MΩ
1.6 Insulation resistance:	≥5000MΩ
1.7 VSWR	1.20:1@3GHz

2 Environmental&Mechanical

2.1 Temperature range	-40℃～+125℃
2.2 RoHs Compliant	
2.3 Durability	>500 cycles

3 Materials&plating

3.1 Body:	Brass; Nickel plated
3.2 Insulator:	Teflon
3,3 Contact Pin:	Phosphor Bronze, Gold plated
3.4 Ferrule:	Copper, Nickel plated

Recommended Cable Stripping Dimension

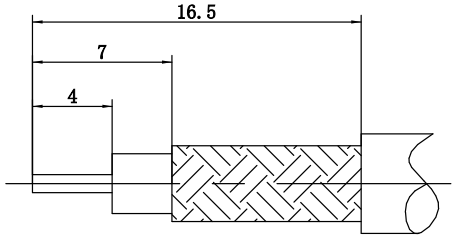

Notes:

1. ALL SPECIFICATIONS ARE SUBJECT TO CHANGE NOTICE AT ANY TIME
2. CUSTOMER OUTLINE DRAWING FOR REFERENCE ONLY

DRAWN : T.Haiyun 26/02/09
ENGINEER: C.Tao 26/02/09
APPROVED : W.Qiang 26/02/09

TOLERANCES UNLESS OTHERWISE SPEFICIED
X ±0.50
.X ±0.20
.XX ±0.10
ANGLES ±1°

TITLE:
RF Coaxial Connector
TNC Female Conn. for
LMR200/SD-PB Cable Crimp

PART NO: TNC-KSD-PBW

TRL
www.rf-connector-china.com

DIMENSION IN MILLIMETERS (mm)

SIZE: A4 | SCALE: N/A | SHEET: 1/1 | REV: A