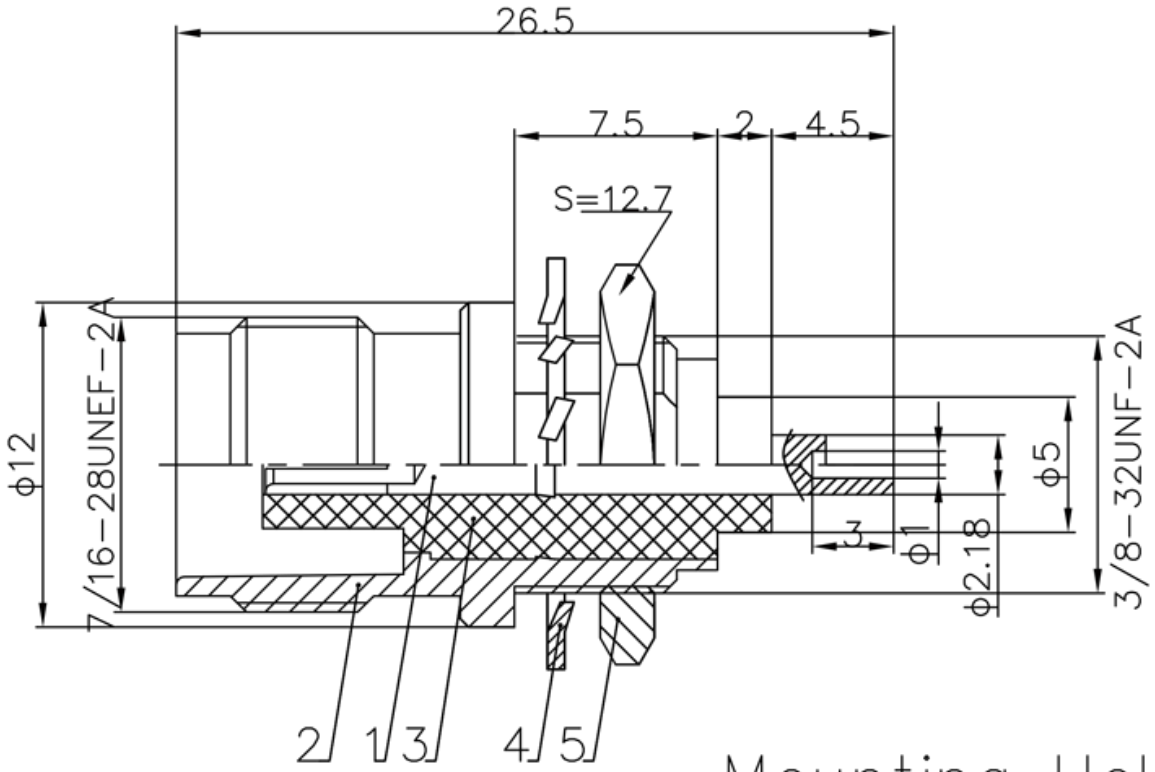

Mounting Hole

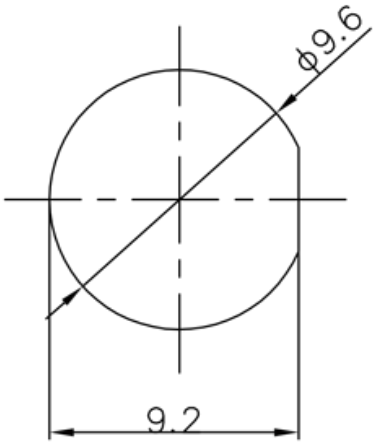

Electrical characteristics
Impedance:50 Ω
Working voltage: ≤500V
Dielectric withstanding voltage:≥1500V
Insulation resistance:≥5000MΩ

NO.	DESCRIPTION	Q'TY	MATERIAL	PLATING
5	NUT	1	BRASS	Nickel
4	GASKET	1	Phospher	Nickel
3	INSULATOR	1	TEFLON	
2	BODY	1	BRASS	Nickel
1	Inner contact	1	Phospher	Glod

CUSTOMER	DATE 7-Sep-10		T-RELY ELECTRONICS
	APPROVED BY	Jason	TITLE
CUSTOMER CODE	CHECKED BY	Mike Wang	TNC-50KY
	DRAWN BY	Tomson Tang	
www.rf-connector-china.com	SCALE 2/1	UNIT mm	A4 DWG NO. / SHEET