REV	DESCRIPTION OF REVISION	ECN NO.	BY	DATE	APPROVED
A	Initial Release	———	T.Haiyun	15/09/17	15/09/17

This document contains proprietary information and such informationmay not be disclosed to others for any purposes, not used for sales/marketing/procurement purposes without written permission

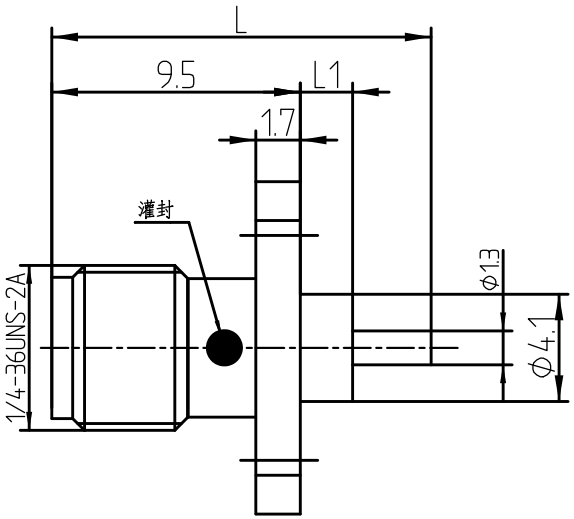

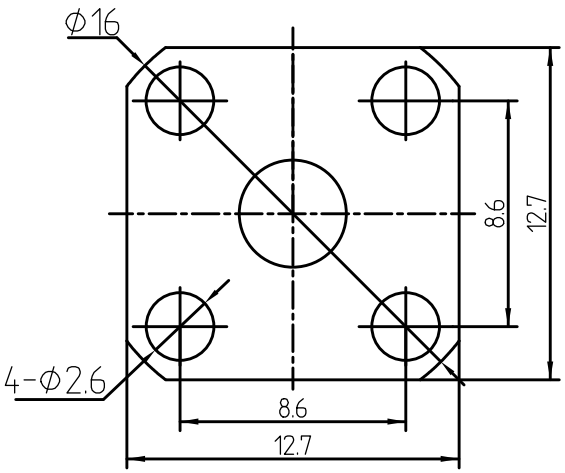

Mounting Hole

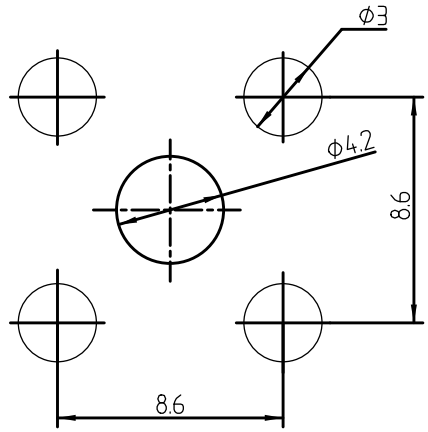

1 Electrical

1.1 Impedence	50Ω
1.2 Frequency	DC~6GHz
1.2 Dielectric withstanding voltage	1000V(volts RMS)
1.3 Center contact resistance	≤ 3MΩ
1.4 Outer contact resistance	≤ 2MΩ
1.5 Insulation resistance:	≥5000MΩ
1.6 VSWR	1.2max

2 Environmental&Mechanical

2.1 Temperature range	-45℃~85℃
2.2 RoHs Compliant	
2.3 Durability	>500 cycles

3 Materials&plating

3.1 Body:	Brass, Gold plated
3.2 Insulator:	Teflon
3,3 Contact Pin:	Bronze, Gold plated

L	L1	P/N
14.5	2	SMA-KFD1022
15.5	3	SMA-KFD1023
16.5	4	SMA-KFD5C
17.5	5	SMA-KFD1024
18.5	6	SMA-KFD25
19.5	7	SMA-KFD1026
20.5	8	SMA-KFD177
21.5	9	SMA-KFD6A
22.5	10	SMA-KFD1027
23.5	11	SMA-KFD1028
24.5	12	SMA-KFD197A
27.5	15	SMA-KFD22

Notes:

1. ALL SPECIFICATIONS ARE SUBJECT TO CHANGE NOTICE AT ANY TIME
2. CUSTOMER OUTLINE DRAWING FOR REFERENCE ONLY

DRAWN : T.Haiyun 15/09/17
ENGINEER: C.Tao 15/09/17
APPROVED : W.Qiang 12/07/08

TOLERANCES UNLESS OTHERWISE SPEFICIED
X ±0.50
.X ±0.20
.XX ±0.10
ANGLES ±1°

TITLE:
RF Coaxial Connector
SMA Female Flange Conn. Terminal

PART NO:

TRL ®
www.trl-rf.com

DIMENSION IN MILLIMETERS (mm)

SIZE:	SCALE:	SHEET:	REV:
A4	N/A	1/1	A